Aovita®

DIE CLAMP

Since 2000

Jinan Aotto Technologies Co., Ltd.

OVERALL SOLUTIONS FOR ROBOTIC END-EFFECTOR

- ★ EOAT FOR STAMPING
  - • EOAT FOR TANDEM PRESS LINE
  - • EOAT FOR TRANSFER LINE
  - • EOAT FOR HOT FORMING LINE
- ★ PNEUMATIC GRIPPERS
- ★ ELECTRIC GRIPPERS
- ★ ROBOTIC TOOL CHANGERS
- ★ CLAMP
  - • HYDRAULIC CLAMP
  - • DIE CLAMP

Jinan Aotto Technologies Co., Ltd.

Addr: Room 801, Building 3, Zone 2, Jianda Hexin Industry Base,
Jinan Innovation Valley Accelerator, Changqing District,
Jinan City, Shandong Province, China.

Shop: https://aotto.en.alibaba.com

Email: overseas@aotto.cn

Tel: 0531- 87201565

Web: www.aottotech.com

Learn more

Ver. 2026-09

Aotto

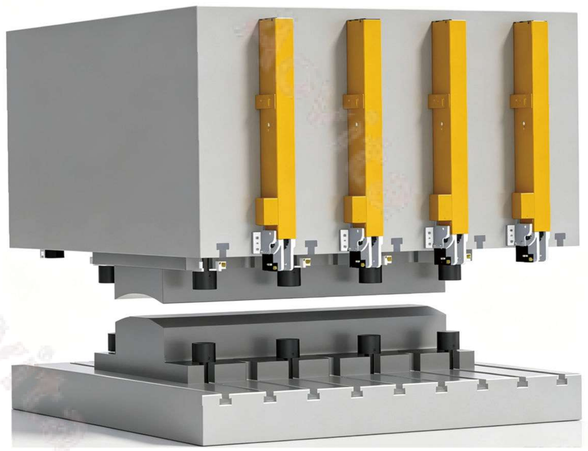

Aovita®

Aotto End-of-Arm Tooling Division upholds the mission of "promoting industrial upgrading with advanced automation products and services, and creating value for customers and society." We are dedicated to developing the Aovita® range of intelligent gripping products.

Adhering to **Aotto's** core philosophy of "dedication to innovation and pursuit of excellence," the **Aovita** team delivers products with outstanding reliability to increase automated line uptime and reduce maintenance costs, while offering excellent cost-performance to lower overall equipment investment and accelerate the adoption of automation. We are committed to building a one-stop supply platform for intelligent gripping solutions, providing robotic tool changers, vacuum products, grippers, electric grippers, magnetic grippers, needle grippers, die clamps, clamps, and complete intelligent gripping solutions.

CONTENTS

- Product Introduction ····· 01
- Application ····· 02
- Value & Selection ····· 04
- TX Handheld Clamp ····· 05
- TXC Handheld Clamp ····· 07
- TY Handheld Clamp ····· 09
- TYC Handheld Clamp ····· 11
- TAX Traveling Clamp ····· 13
- Pneumatic-Hydraulic Power Pack ····· 17

Product Introduction

Aovita® Die Clamps are core components for rapid die change on stamping, injection molding, and die-casting machines. They replace traditional T-bolt manual clamping by using hydraulically driven cylinders to automatically lock and release the dies. When combined with a hydraulic power unit and electrical control system, they form a complete quick die change system. Widely used for securing upper and lower dies on stamping presses, hydraulic presses, and injection molding machines, the system enables one-touch die change and standardized clamping, and serves as a standard part in SMED (Single-Minute Exchange of Die) lean changeover.

TX Handheld Clamp

Insert the clamp into the T-slot and locks in the U groove of the die. Accessory: Clamp hook for temporary hanging of the clamp.

TXC Handheld Clamp

Consisting of a TX clamp and a cylinder. The clamp automatically slides along the T-slot under cylinder drive.

TY Handheld Clamp

Link clamp that slides manually along the T-slot. Suitable for dies without a U groove in the clamping section.

TYC Handheld Clamp

Consisting of a TY clamp and a cylinder. The clamp automatically slides along the T-slot under cylinder drive.

TAX Traveling Clamp

The clamp automatically slides along the T-slot, driven by the cylinder, further reducing die change time.

Pneumatic-Hydraulic Power Pack

It controls the clamping and releasing of the clamp, with pressure-holding function, and can be remotely controlled via the press control cabinet.

Application

Manual Die Change System

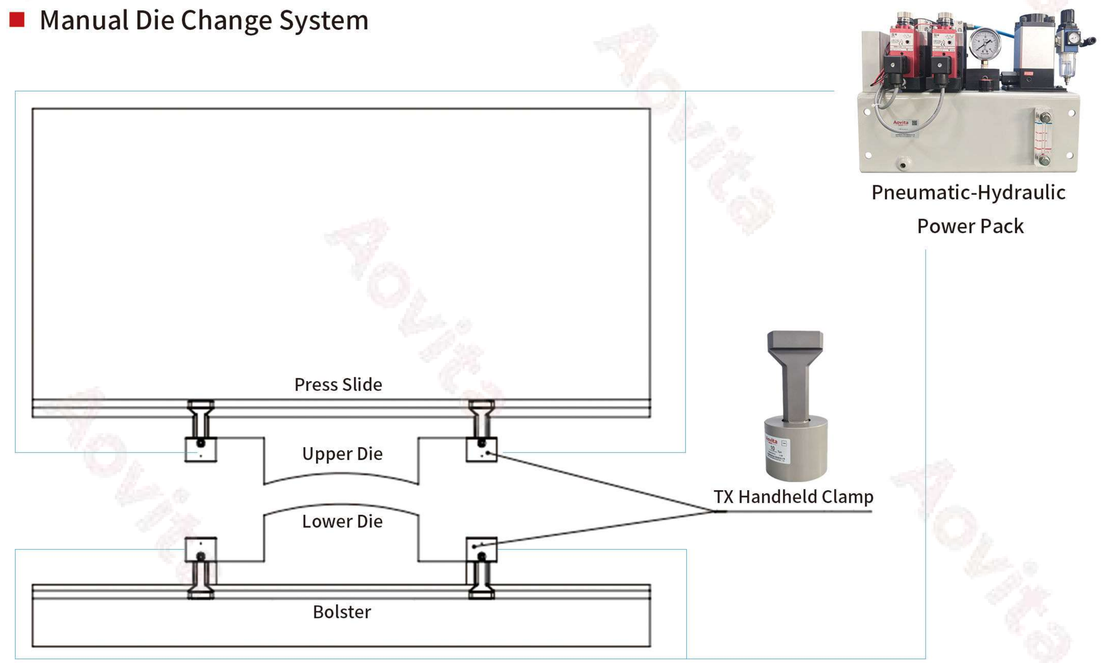

The manual die change system consists of a pneumatic-hydraulic power pack, TX clamps, TY clamps, and installation pipelines.

It is a cost-effective solution primarily used in stamping and injection molding industries that do not require automated die change.

Application

Automatic Die Change System

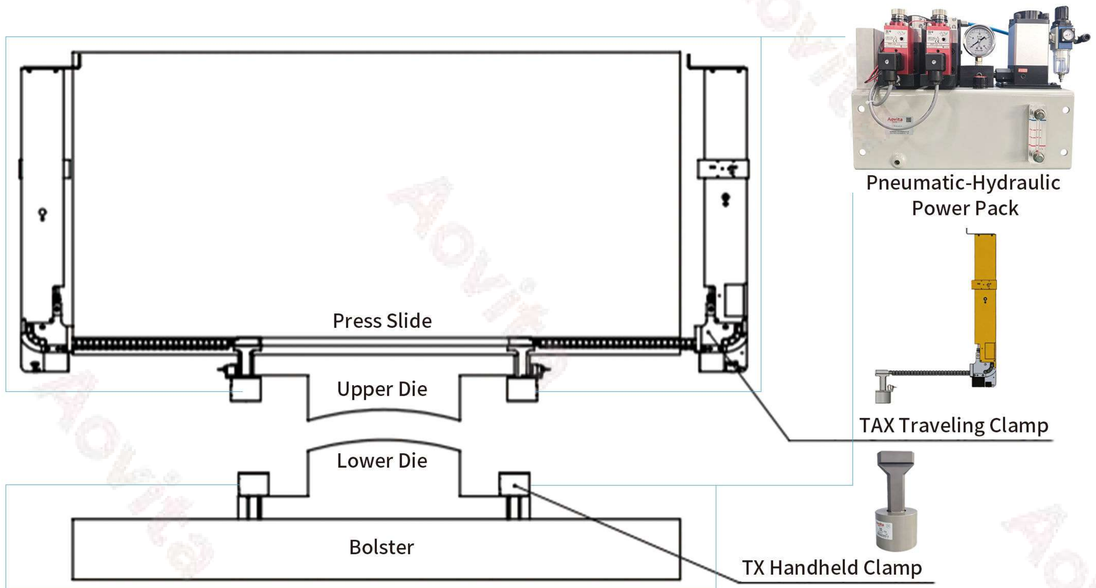

The automatic die change system consists of a pneumatic-hydraulic power pack, TAX clamps (upper die), TX or TY clamps (lower die), and installation piping. Requiring no manual entry into the press line, it offers faster and safer die changes, and is mainly applied in large-press stamping lines and the automotive industry.

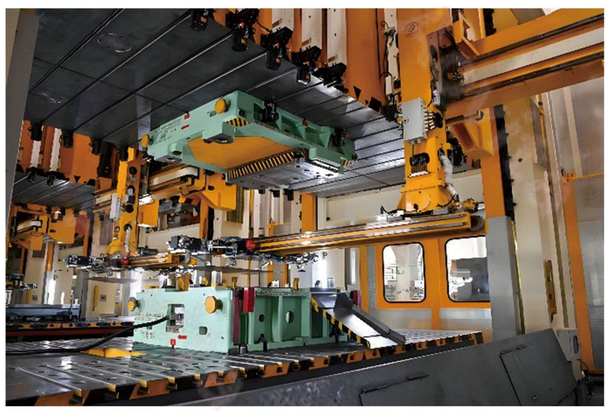

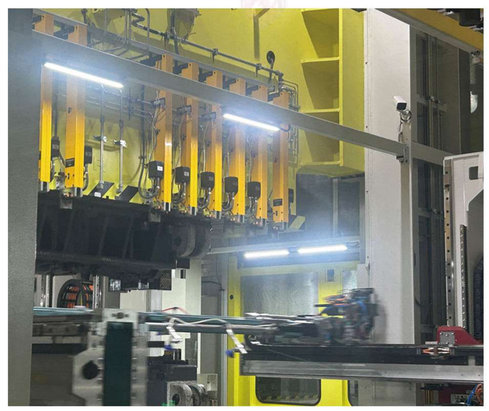

Value & Selection

Reliable Quality & High Cost-Performance

- With a well-established ISO 9001 quality management system, we achieve end-to-end production control to guarantee manufacturing quality.
- Raw materials are strictly controlled from the source to ensure product quality. With our proprietary surface and heat treatment processes, all core components are manufactured in-house for superior precision, while premium imported seals ensure outstanding sealing performance and extended service life.
- Mature and efficient manufacturing system enables effective control of production quality and cost, delivering products with excellent cost-performance.

Cost Reduction & Efficiency Improvement

- Traditional bolt die change: 60–120 min. Manual die change system: one-button clamping, reducing die change time to within 10 min. Automatic die change system: one-touch start/stop of the full hydraulic clamping system reduces die change time to within 3 min; it can be interlocked with the machine for automatic clamping/releasing, supporting continuous and automated production.
- The clamps operate on compressed air only, resulting in low energy consumption and reduced operating costs.

Safety & Stability

- High-strength steel parts with proprietary surface and heat treatment processes for robust structure and long service life.
- The pneumatic-hydraulic power pack features a pressure-holding function that keeps the clamps securely locked and prevents die displacement during operation. Equipped with pressure switches, the power unit will alarm and shut down the press automatically if clamping force drops below the safety set point.

Selection

The size and quantity of clamps should be selected so that the total clamping force (clamping force × quantity) exceeds the values below. For optimal press performance, it is preferable to use more clamps with lower individual force rather than fewer clamps with higher force.

Total clamping force (clamping force × quantity) >

- Crank press: 10% of the press nominal pressure
- High-speed press: 20% of the press nominal pressure
- Hydraulic press: the press return force

TX Handheld Clamp

Released

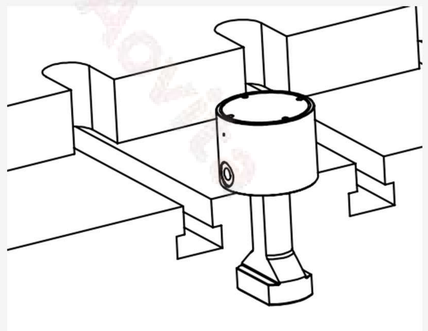

Clamped

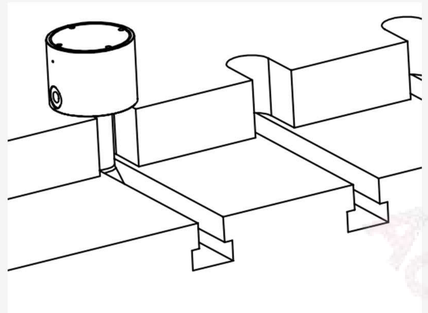

Advantages: Lightweight, high clamping force, rapid clamping, space-saving, stable and reliable.

Application Requirements: Die edge with "U" groove; press slide and bolster with T-slots.

Specification

Model	TX-2	TX-4	TX-6	TX-10	TX-16	TX-25
Proof pressure MPa	36.8					
Working pressure MPa	24.5					
Clamping force (at 24.5 MPa) kN	19.6	39.2	61.7	98	156	245
Full stroke mm	8					
Clamping stroke mm	5					
Safety stroke mm	3					
Cylinder capacity (full stroke) cm^3	6.5	13	21	32	54	84
Ambient temperature °C	0～70					

Dimensions

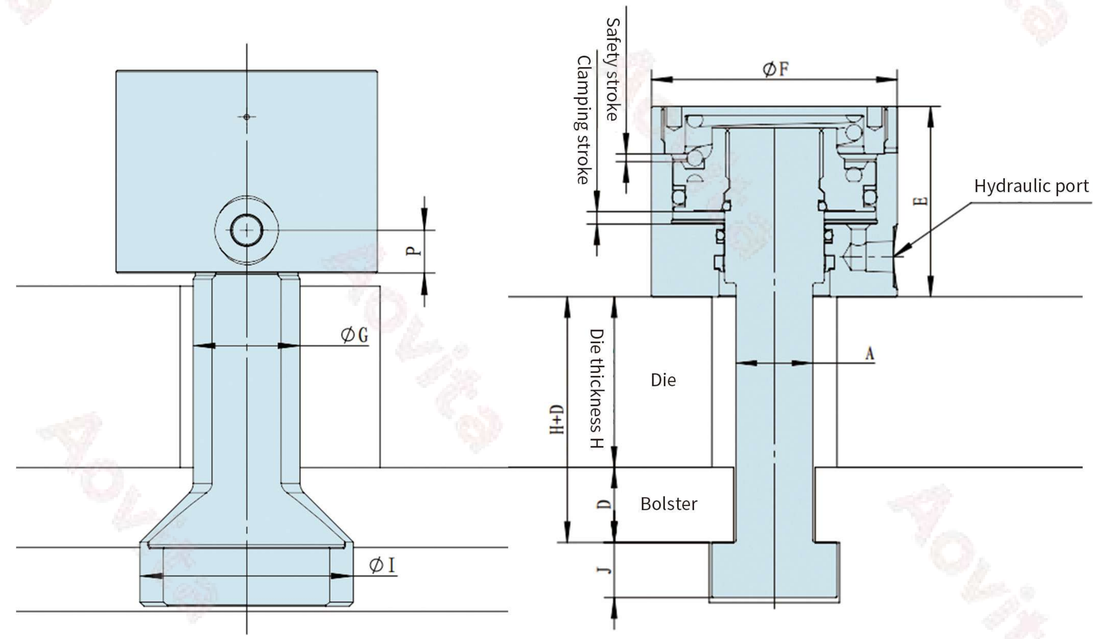

Installation Dimensions

Unit: mm (for all linear dimensions in this table)

Model	TX-2	TX-4	TX-6	TX-10	TX-16	TX-25
E	57	64	71	76	83	105
øF	49	62	78	98	127	157
øG	16	25	30	40	50	60
øI	38	60	65	80	90	100
Hydraulic port	RC1/4					
P	12	13.5	15	16	16	18
Min. A	10	12	15	18	23	27
Max. H+D	80	90	100	110	120	120
H Tolerance	±0.3					
D Tolerance	±0.2					
Min. J	9	11	15	18	21	24

- Recommended die thickness: 25、30、35、40、45、50、55、60 mm.
- For special die thickness (H) or T-slot dimensions, please confirm before ordering.

TXC Handheld Clamp

Consisting of a TX clamp and a cylinder. The clamp automatically slides along the T-slot under cylinder drive.

Selection

TXC — 2 — 050

Sliding Stroke

TX Clamp Model
2:TX-2(Clamping force 19.8 kN)
4:TX-4(Clamping force 39.2 kN)
6:TX-6(Clamping force 61.7 kN)
10:TX-10(Clamping force 98 kN)

Model	Sliding Stroke
TXC-2	50, 75, 100, 125, 150, 200
TXC-4	75, 100, 125, 150, 200
TXC-6	100, 125, 150, 200
TXC-10	100, 150, 200

Dimensions

Released ▶ Clamped

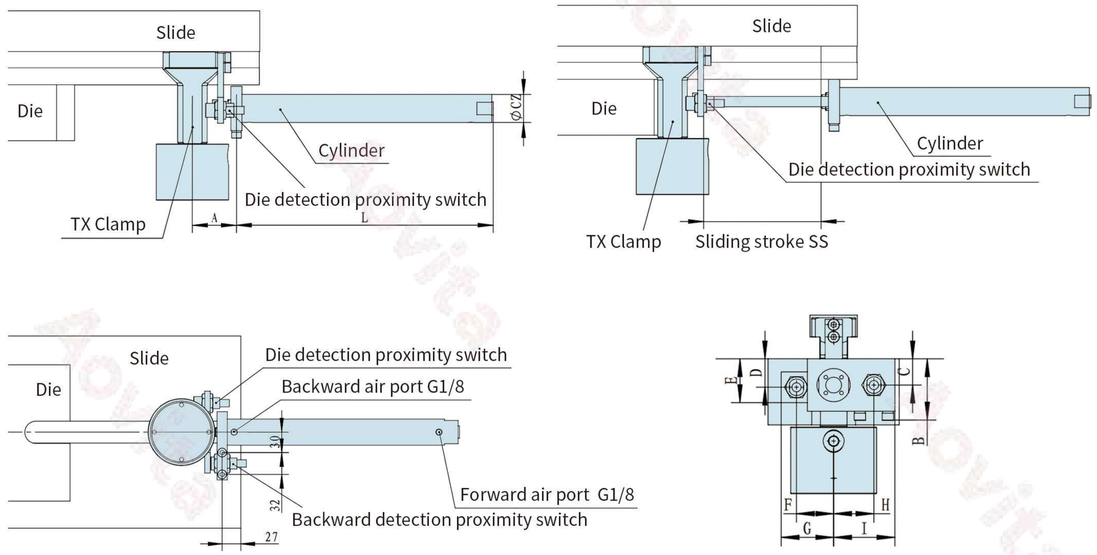

Installation Dimensions

Unit: mm (for all linear dimensions in this table)

Modle	TXC-2	TXC-4	TXC-6	TXC-10
øCZ	26	26	26	38
L	SS+77	SS+77	SS+77	SS+81
A	42	54	57	64
B	39.5	39.5	39.5	54
C	16	16	16	22
D	19	19	19	20
E	33	33	33	34
F	36	36	36	43
G	50.5	50.5	50.5	57.5
H	34	34	34	39.5
I	53	53	53	54
Mounting bolts	2-M6×40	2-M6×40	2-M6×40	2-M8×55

TY Handheld Clamp

Released

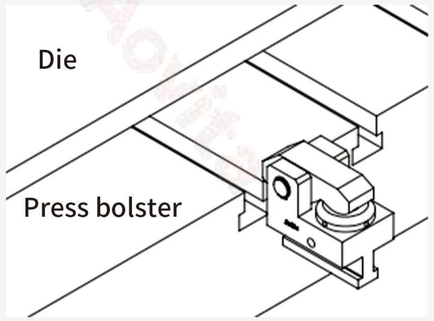

Clamped

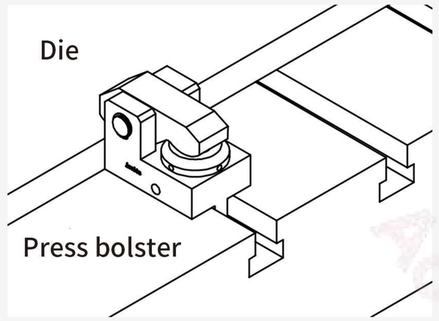

Advantages: Lightweight, high clamping force, rapid clamping, space-saving, stable and reliable.

Application Requirements: Die edge without "U" groove; press slide and bolster with T-slots.

Specification

Model	TY-2	TY-4	TY-6	TY-10	TY-16	TY-25
Proof pressure MPa	36.8					
Working pressure MPa	24.5					
Clamping force (at 24.5 MPa) kN	19.6	39.2	58.8	98	156	245
Full stroke mm	7		8			
Clamping stroke mm	4					
Safety stroke mm	3		4			
Cylinder capacity (full stroke) cm^3	6.3	13.2	22.3	37	61	93
Ambient temperature °C	0～70					

Dimensions

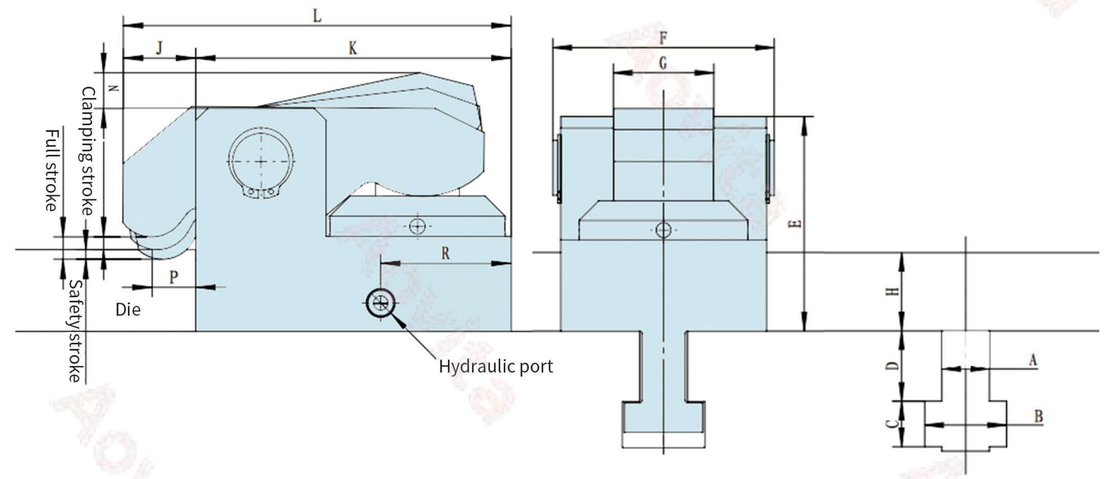

Installation Dimensions

Unit: mm (for all linear dimensions in this table)

Model	TY-2	TY-4	TY-6	TY-10	TY-16	TY-25
F	63	87	97	110	130	150
G	28	40	44	50	60	73
J	22	25	30	30	30	30
K	85	120	133	165	200	240
L	107	145	163	195	230	270
P	12.5	16	20	20	20	20
R	35	45	55	67	81	95
Hydraulic port	RC1/4					
Min. A	12.5	15	19	23	27	32
Min. C	9.5	11.5	15	17	20	23
Min. H	22.5	28	28	38	48	68
H Tolerance	±0.3					
D tolerance	±0.2					

- Recommended die thickness: 25、30、35、40、45、50、55、60 mm.
- For special die thickness (H) or T-slot dimensions, please confirm before ordering.

TYC Handheld Clamp

Consisting of a TY clamp and a cylinder. The clamp automatically slides along the T-slot under cylinder drive.

Selection

TYC — 2 — 050

Sliding Stroke

TY Clamp Model
2:TY-2(Clamping force 19.8 kN)
4:TY-4(Clamping force 39.2 kN)
6:TY-6(Clamping force 58.8 kN)
10:TY-10(Clamping force 98 kN)

Model	Sliding Stroke
TYC-2	25, 50, 75, 100, 125, 150
TYC-4	25, 50, 75, 100, 125, 150
TYC-6	50, 75, 100, 125, 150, 200
TYC-10	50, 75, 100, 125, 150, 200, 250, 300

Dimensions

Released → Clamped

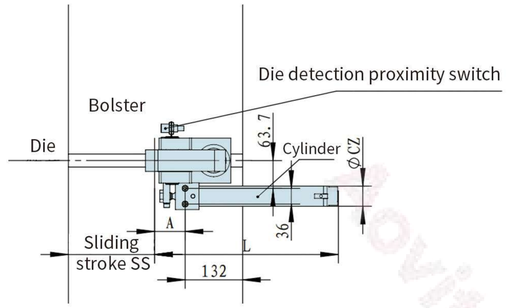

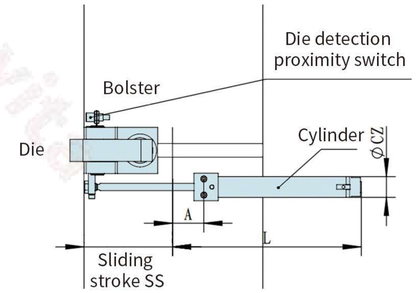

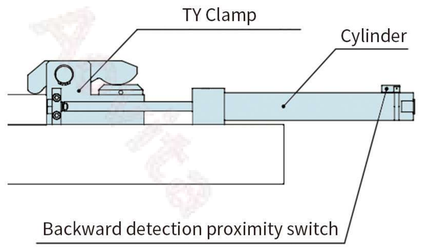

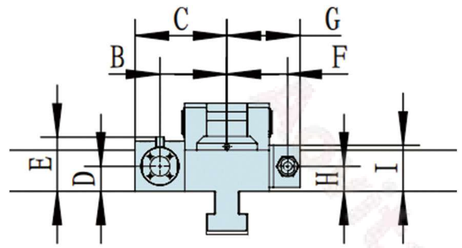

Installation Dimensions

Unit: mm (for all linear dimensions in this table)

Modle	TYC-2	TYC-4	TYC-6	TYC-10
øCZ	26	26	38	47
L	SS+108.5	SS+108.5	SS+119	SS+137
A	42.5	42.5	47	57
B	48.5	56	70	81
C	64.6	72.1	89.5	109
D	15	15	21	26
E	42	42	54	63
F	47	54.5	64.5	74
G	61.5	69	79	89
H	15	15	21	26
I	29.5	29.5	38.5	51
Mounting bolts	2-M5×35	2-M5×35	2-M8×45	2-M10×55

TAX Traveling Clamp

Consisting of a TX clamp and a drive unit. The handheld clamp automatically slides along the T-slot under cylinder drive.

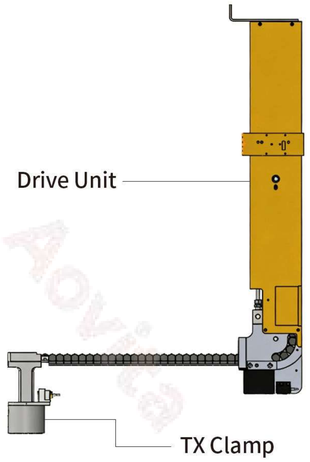

Selection

TAX — 4 — 300 — L — DC24 V — DC24 V

- 4: Modle
- 300: Traveling stroke 300-1000mm
- L: Terminal box mounting position L: As shown in the right figure R: Mounted on the opposite side
- DC24 V: Proximity switch voltage DC24 V/AC110 V/AC220 V
- DC24 V: Solenoid valve voltage DC24 V/AC110 V/AC220 V

Modle
4:TAX-4(Clamping force 39.2 kN)
6:TAX-6(Clamping force 61.7 kN)
10:TAX-10(Clamping force 98 kN)

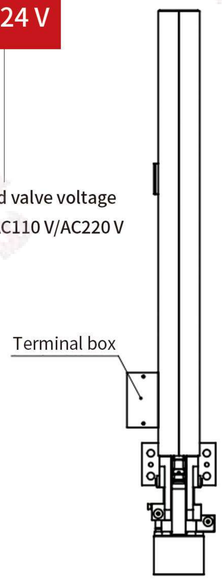

Control Method

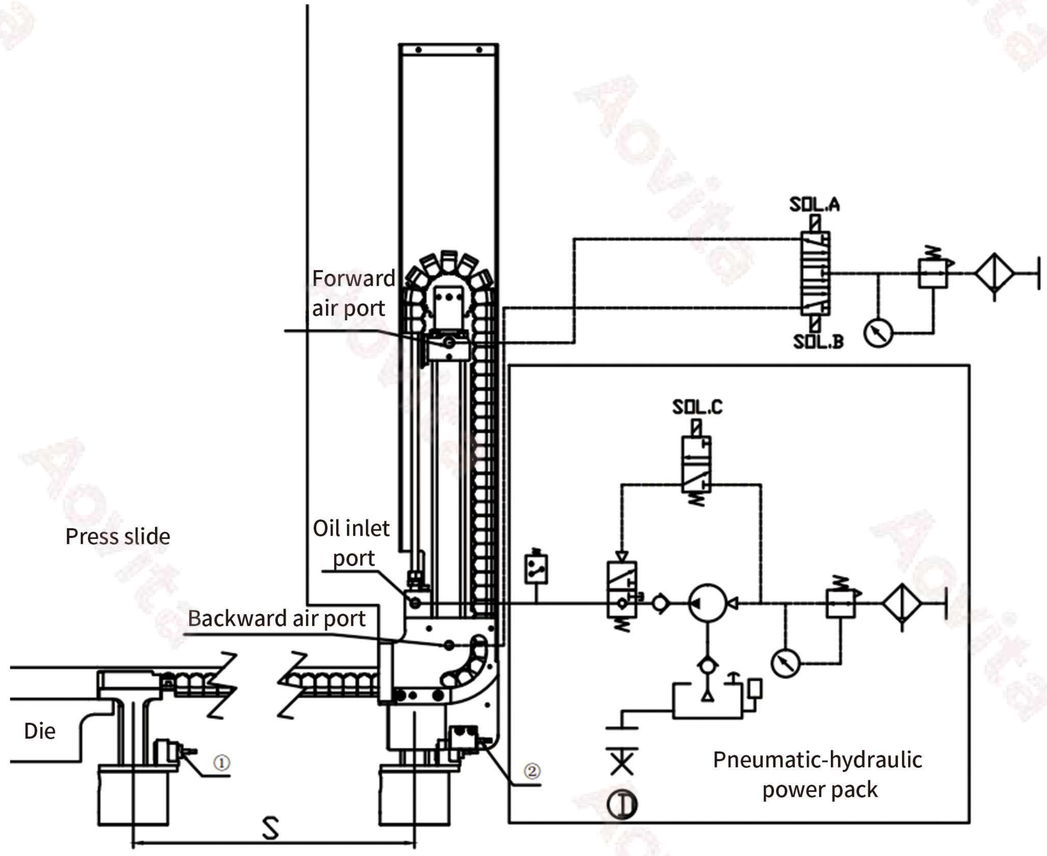

Release & Return to Home	Release & Forward to Clamp the Die
① Solenoid valve SOL.C is energized → hydraulic directional valve shifts to release pressure → clamp is released. ② Solenoid valve SOL.B is energized → compressed air enters the backward air port → cylinder rod rises and pulls the clamp back to the body end via the drag chain. ③ The clamp returns the body end → proximity switch ② sends a signal → SOL.C is de-energized → clamp is clamped.	① Solenoid valve SOL.C is energized → hydraulic directional valve shifts to release pressure → clamp is released. ② Solenoid valve SOL.A is energized → compressed air enters the forward air port → cylinder rod descends and pushes the clamp toward the die end via the drag chain. ③ The clamp forwards the die end → proximity switch ① sends a signal → SOL.C is de-energized → clamp is clamped.

Proximity Switch

Die End Proximity Switch

Model	Operating voltage	Switching capacity
AC proximity switch	AC110 V/220 V	5-300 mA
DC proximity switch	DC24 V	3-100 mA

Body End Proximity Switch

Model	Operating voltage	Switching capacity
AC proximity switch	AC110 V/220 V	5-300 mA
DC proximity switch	DC24 V	3-100 mA

Internal Wiring

DC Type

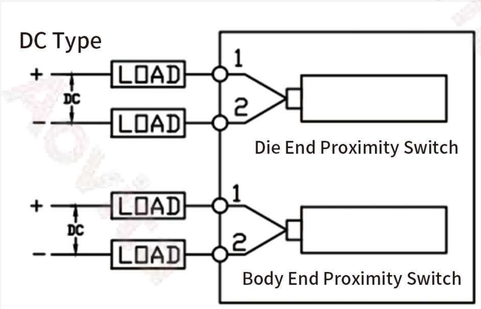

AC Type

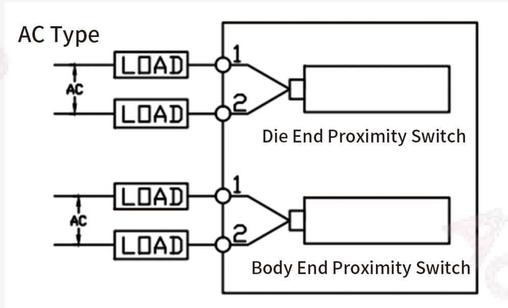

Dimensions

Mounting Surface Machining

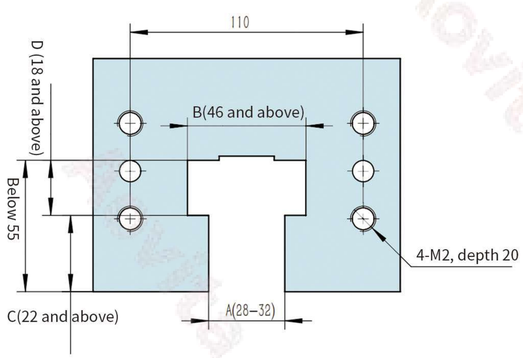

Installation Notes

- The ends and interior of the T-slots shall be manually deburred to ensure a smooth transition and must be free of burrs.
- Before installing traveling clamps, all T-slots must be thoroughly cleaned and free of foreign matter.
- When installing traveling clamps, the sliding surface of the T-slot (in contact with the clamp pull rod) must be parallel to the bottom surface of the pull rod.

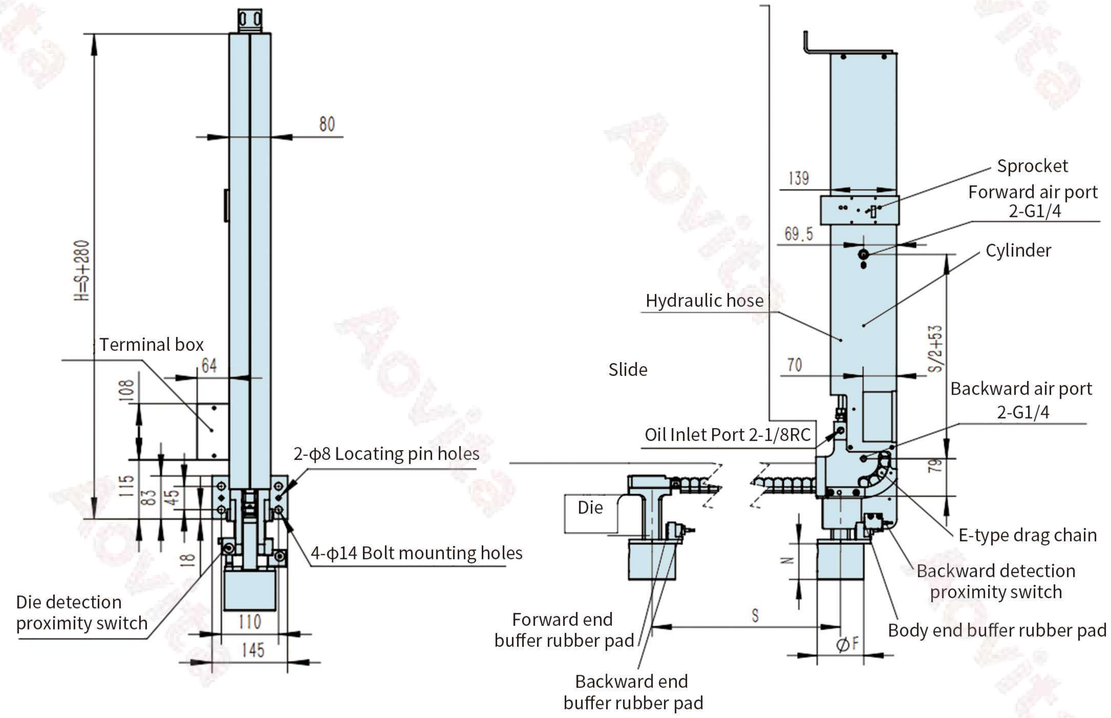

Specification

Model	TAX-4	TAX-6	TAX-10
Proof pressure MPa	24.5		
Working pressure MPa	36.8		
Clamping force (at 24.5 MPa) kN	39.2	58.8	98
Full stroke mm	8		
Traveling stroke mm	300-1000		
Traveling speed m/s	0.14～0.30 (adjustable via speed regulator)		
Ambient temperature °C	0～70		
Cylinder capacity (full stroke) cm^3	13	21	32
F mm	62	78	98
N mm	64	71	76

Pneumatic-Hydraulic Power Pack

The pneumatic-hydraulic power pack consists of a pneumatic pump, solenoid valves, air-piloted hydraulic directional valves (zero-leakage), and pressure switches. It controls the clamping and releasing of the clamps, features a pressure-holding function, and can be remotely controlled via the press control cabinet.The unit requires only compressed air to generate high-pressure hydraulic fluidl. Featuring a compact design and low operating cost, it is suitable for quick die change systems as well as other hydraulic clamping applications.

Selection

AP 63 08 — 1 — C

Piston diameter

Intensifier rod diameter

Number of circuits	Circuit Model	Circuit function
1	C	Circuit for upper/lower die clamp clamping
	D	Circuit for die lifter lifting
2	2C	Two circuits for upper/lower die clamp clamping
	CD	One circuit for upper/lower die clamp clamping, one circuit for die lifter lifting
3	2CD	Two circuits for upper/lower die clamp clamping, one circuit for die lifter lifting
4	3CD	Three circuits for upper/lower die clamp clamping, one circuit for die lifter lifting

Control Schematic

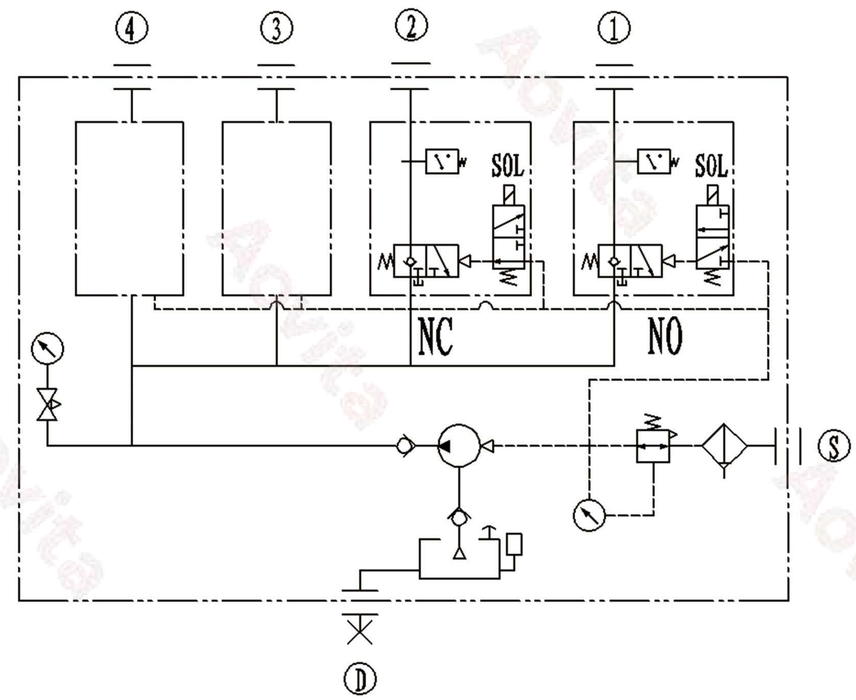

NO Circuit

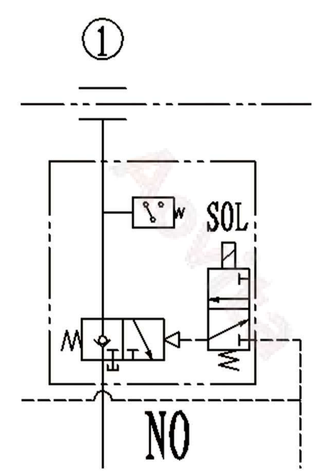

SOL-OFF: Circuit supplies oil

NC Circuit

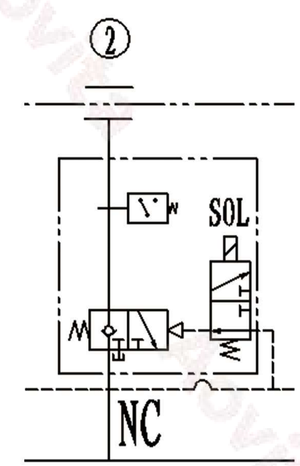

SOL-ON: Circuit supplies oil

Specifications

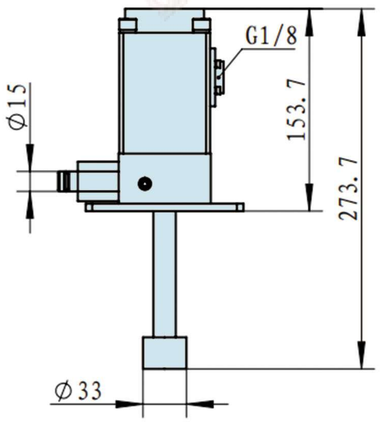

AP6308 Specifications	
Intensification ratio	50
Output flow L/min	Refer to "Performance Curves"
Output oil pressure MPa	
Hydraulic oil	ISO VG32
Operating temperature °C	-5~60
Air pressure MPa	0.2~0.7
Weight kg	2.8

Performance Curves

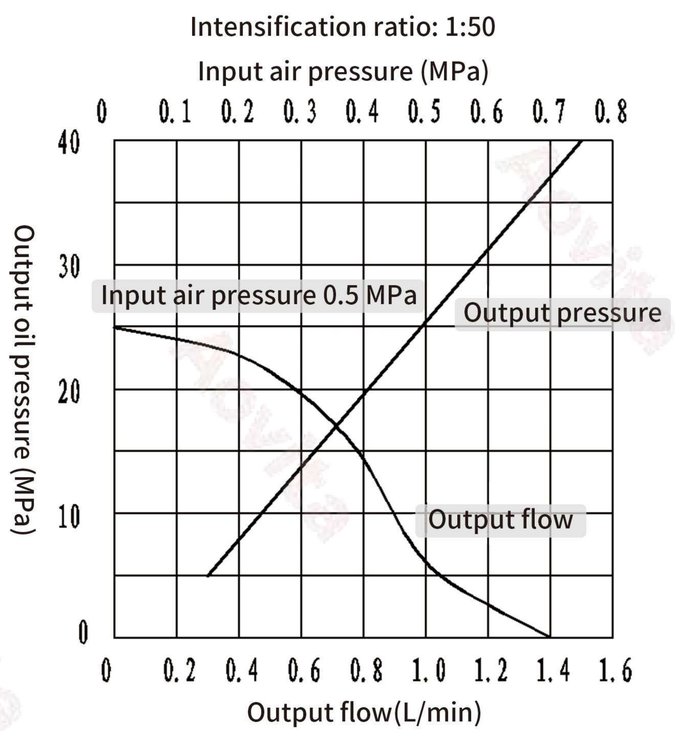

Dimensions

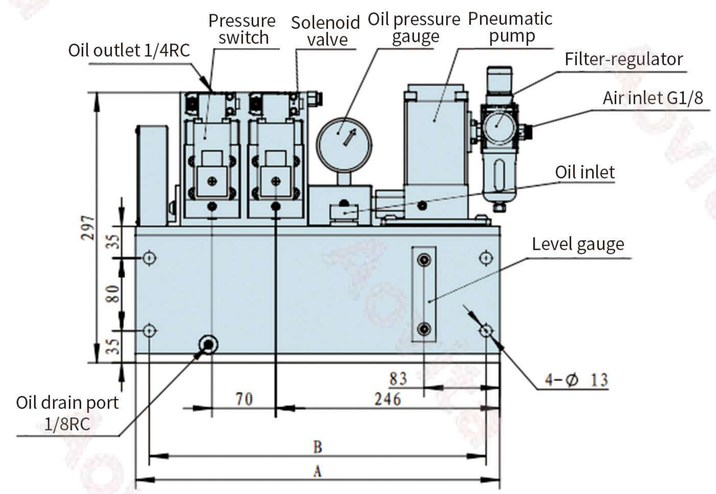

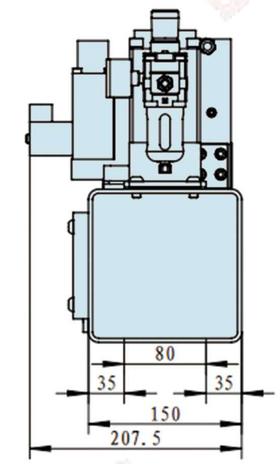

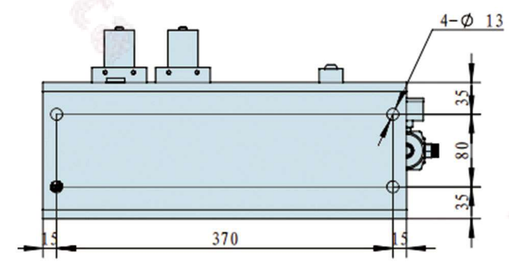

Specifications

Modle	Number of circuits	A mm	B mm	Tank total capacity L	Effective capacity L	Weight kg
AP6308-1	1	400	370	6	4.7	24
AP6308-2	2	400	370	6	4.7	29
AP6308-3	3	470	440	7.5	5.9	38
AP6308-4	4	540	510	9	7.1	47